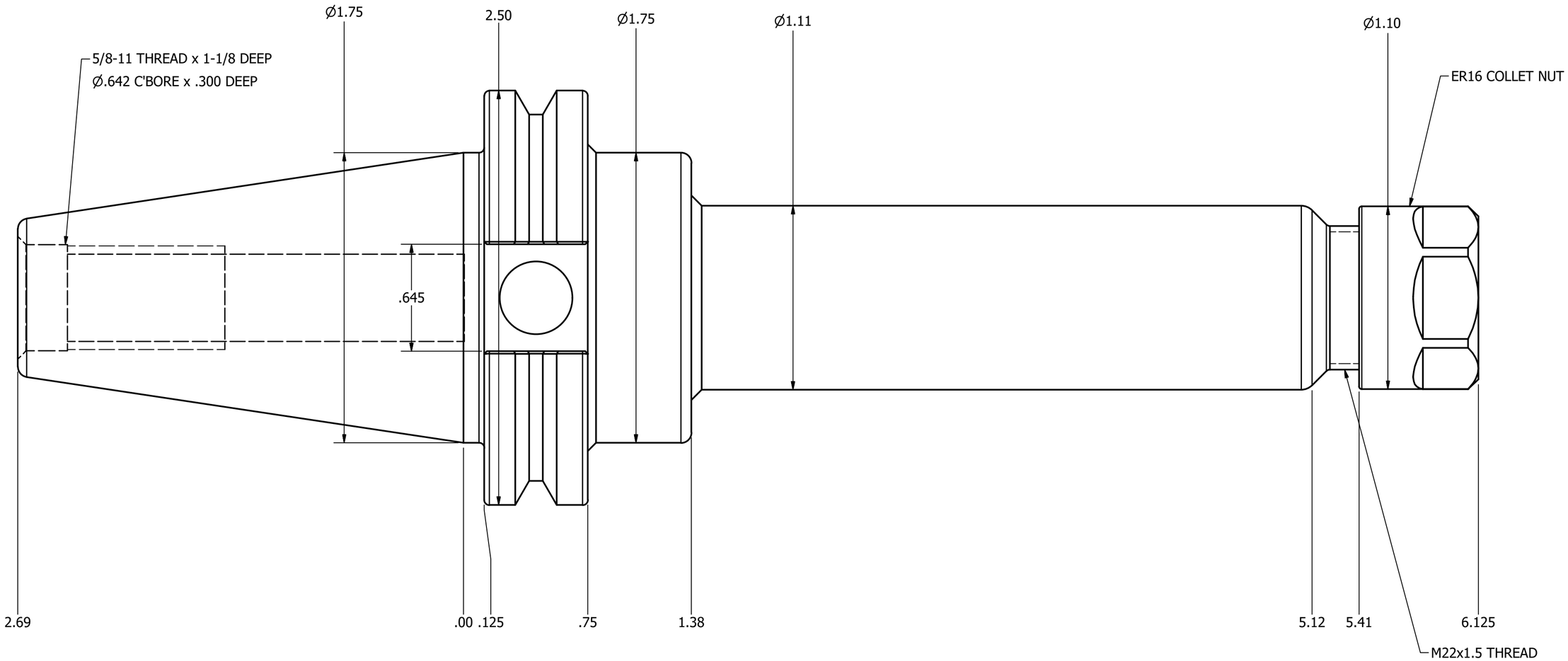

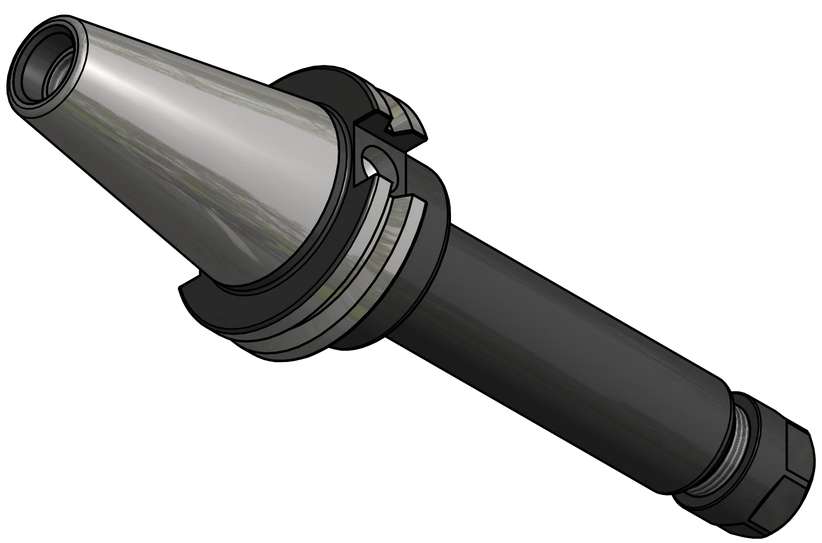

NOTES:
TAKES ALL ER16 COLLETS FROM .039"-.4375"
USES WRENCH PART #ER16-WRENCH (NOT INCLUDED)
FOR MORE PRODUCT DETAILS PLEASE GO TO MARITOOL.COM
AND SEARCH ITEM # LISTED ON THIS PRINT

MARITOOL

www.maritool.com

ITEM# **CAT40-ER16-6.0**

Made in USA