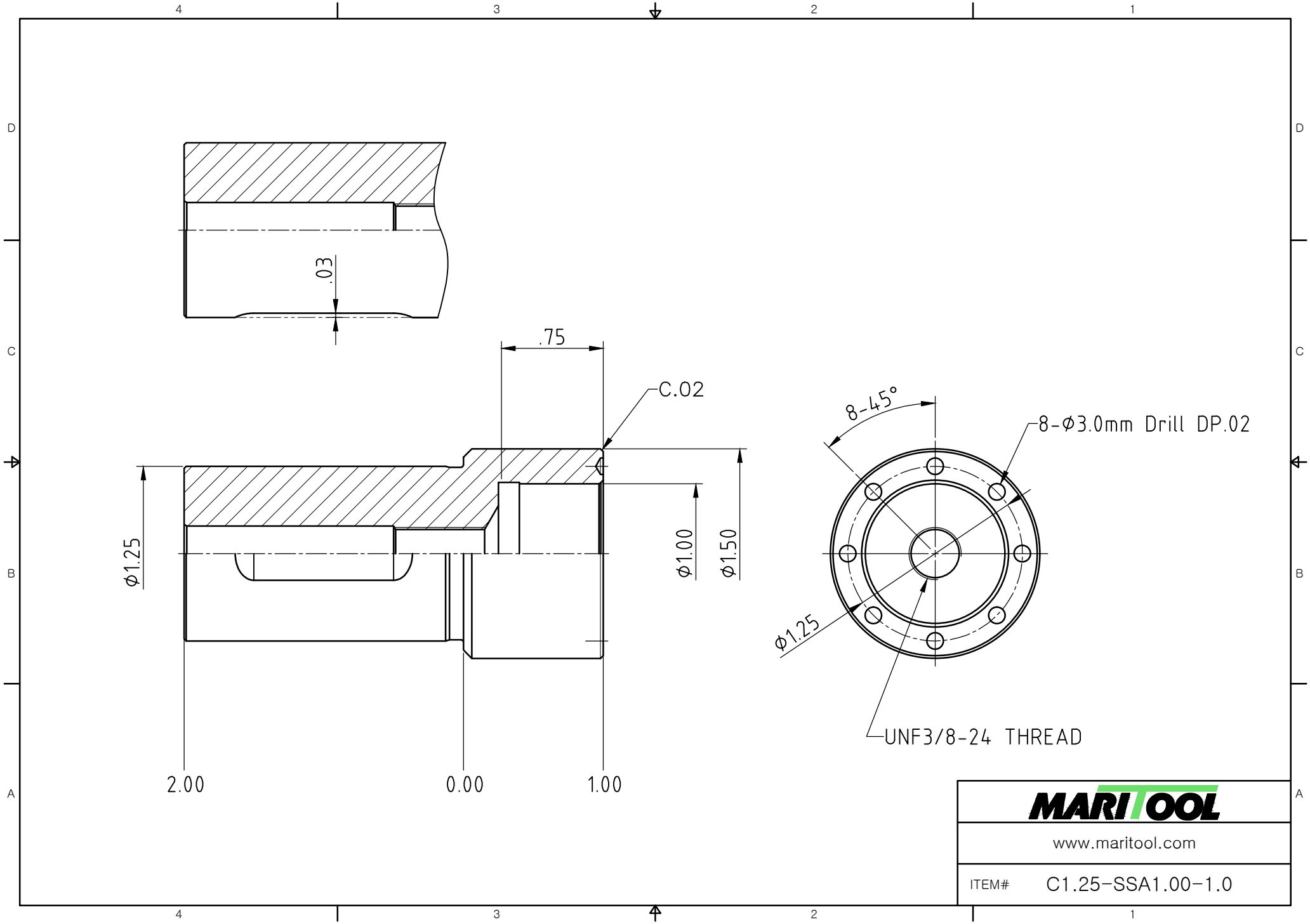
.03
.75
C.02
8-45°
8-Ø3.0mm Drill DP.02
Ø1.25
Ø1.00
Ø1.50
Ø1.25
UNF3/8-24 THREAD
2.00
0.00
1.00
MARITOOL
www.maritool.com
ITEM#
C1.25-SSA1.00-1.0