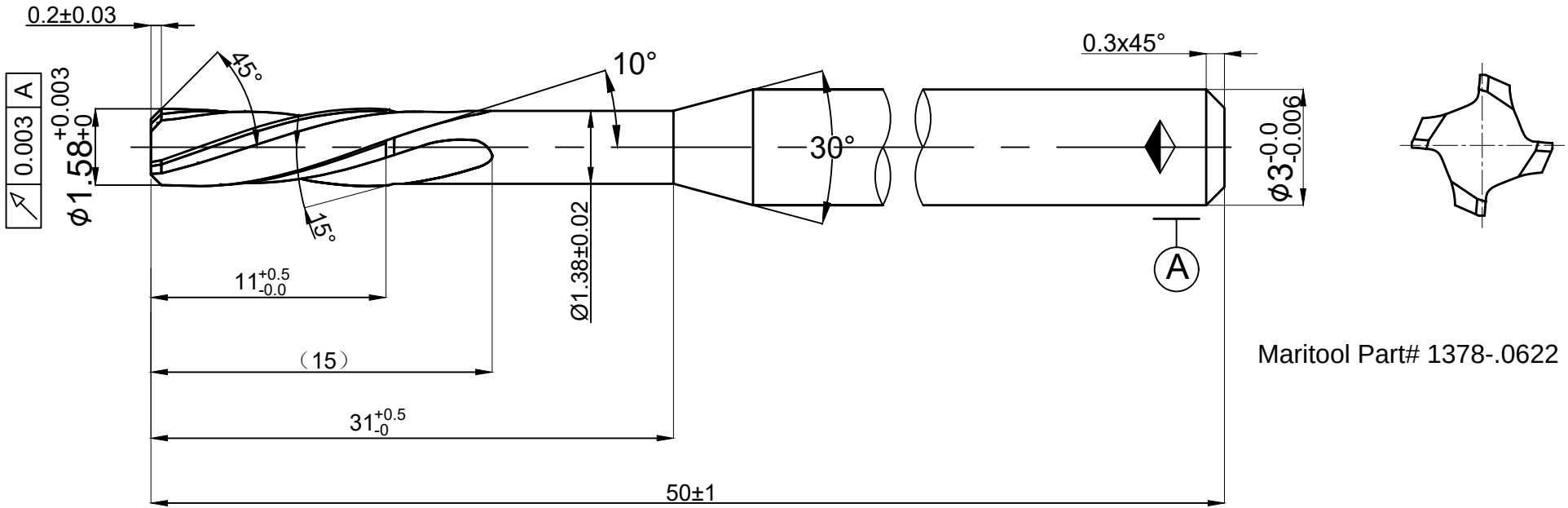

Maritool Part# 1378-.0622