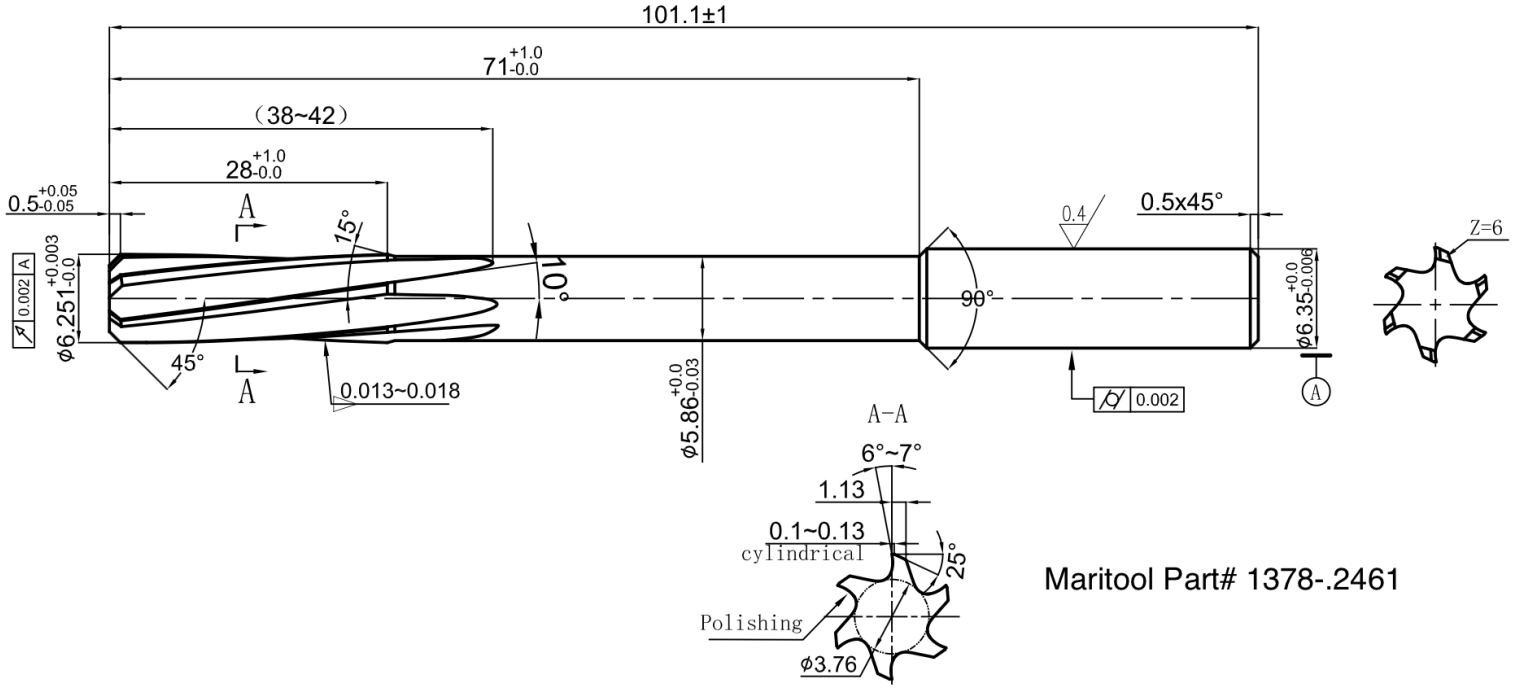

Maritool Part# 1378-.2461