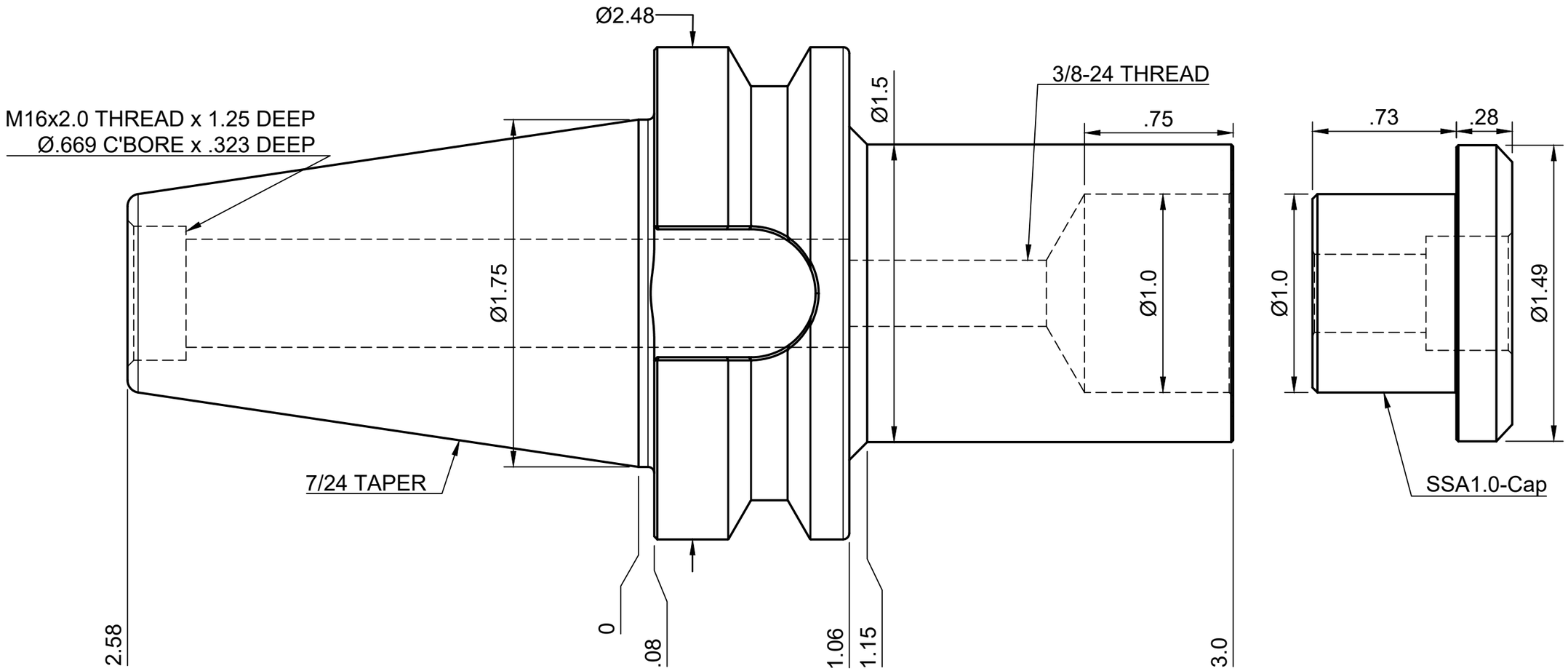

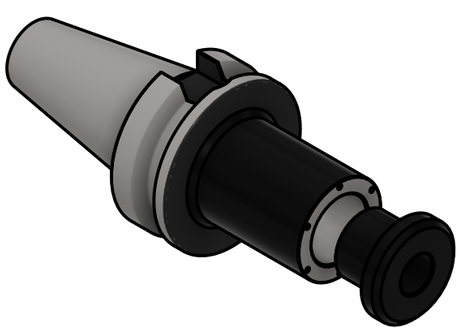

NOTES:
HOLDER USES LOCK SCREW 3/8-24 x 1-1/4 SHCS (INCLUDED)
ACCEPTS SAWS WITH Ø1.0 ARBOR HOLE
FOR MORE PRODUCT DETAILS PLEASE GO TO MARITOOL.COM
AND SEARCH ITEM # LISTED ON THIS PRINT

MARITOOL

www.maritool.com

ITEM# **BT40-SSA1.0-3.0**

Made In USA / Drawn By FM