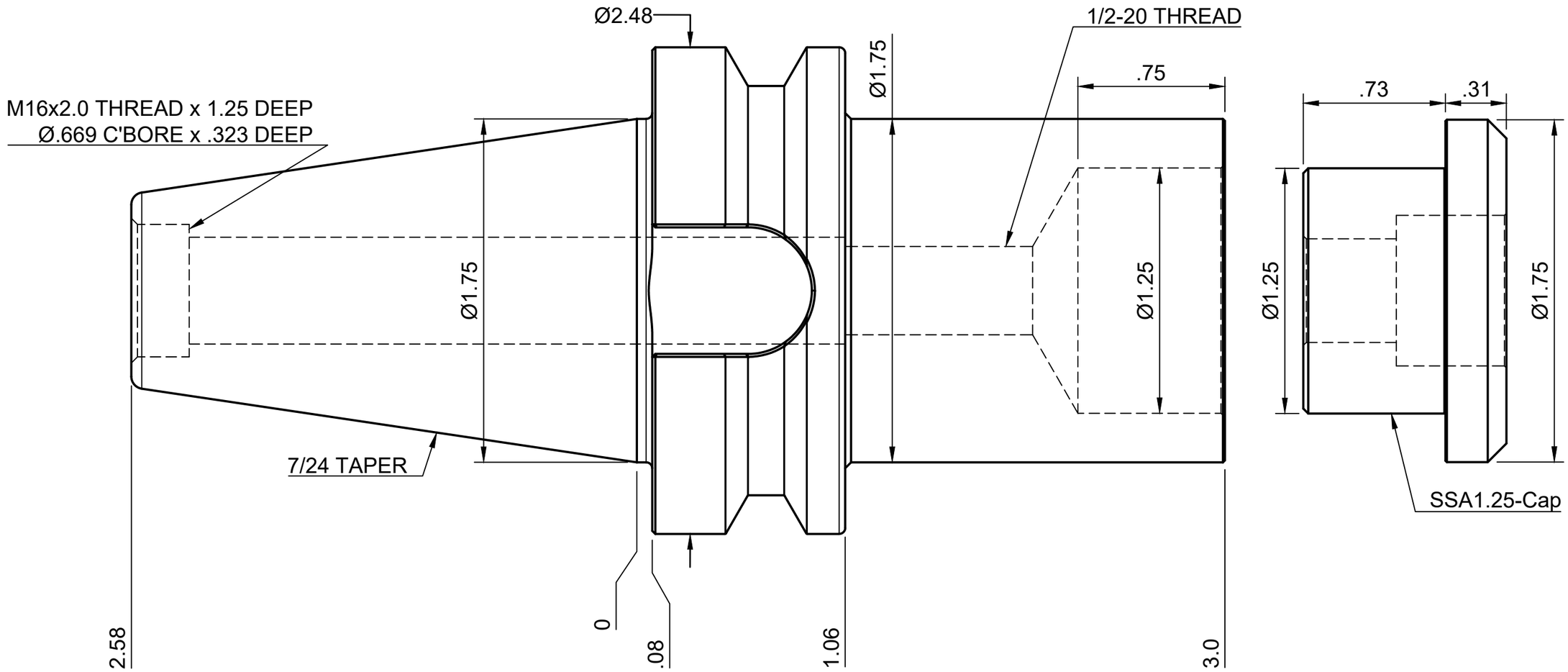

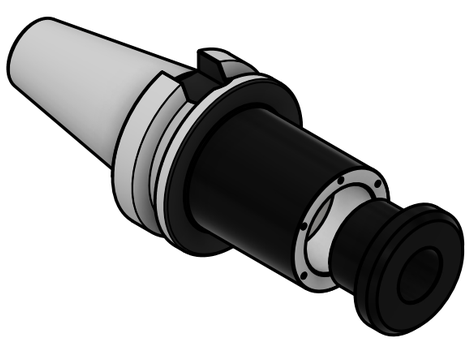

NOTES:
HOLDER USES LOCK SCREW 1/2-20 x 1-1/4 SHCS (INCLUDED)
ACCEPTS SAWS WITH Ø1.25 ARBOR HOLE
FOR MORE PRODUCT DETAILS PLEASE GO TO MARITOOL.COM
AND SEARCH ITEM # LISTED ON THIS PRINT

MARITOOL

www.maritool.com

ITEM# **BT40-SSA1.25-3.0**

Made In USA / Drawn By FM