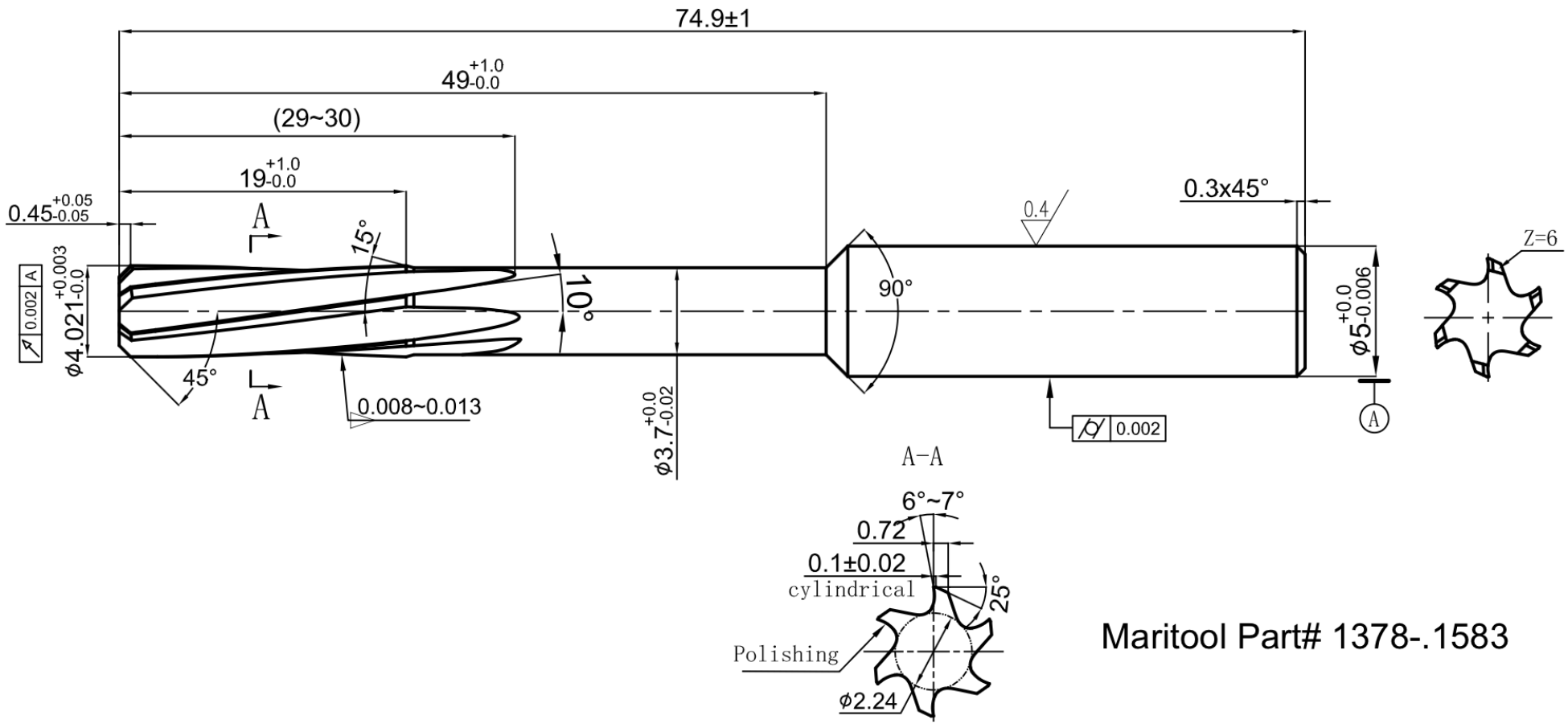

Maritool Part# 1378-.1583