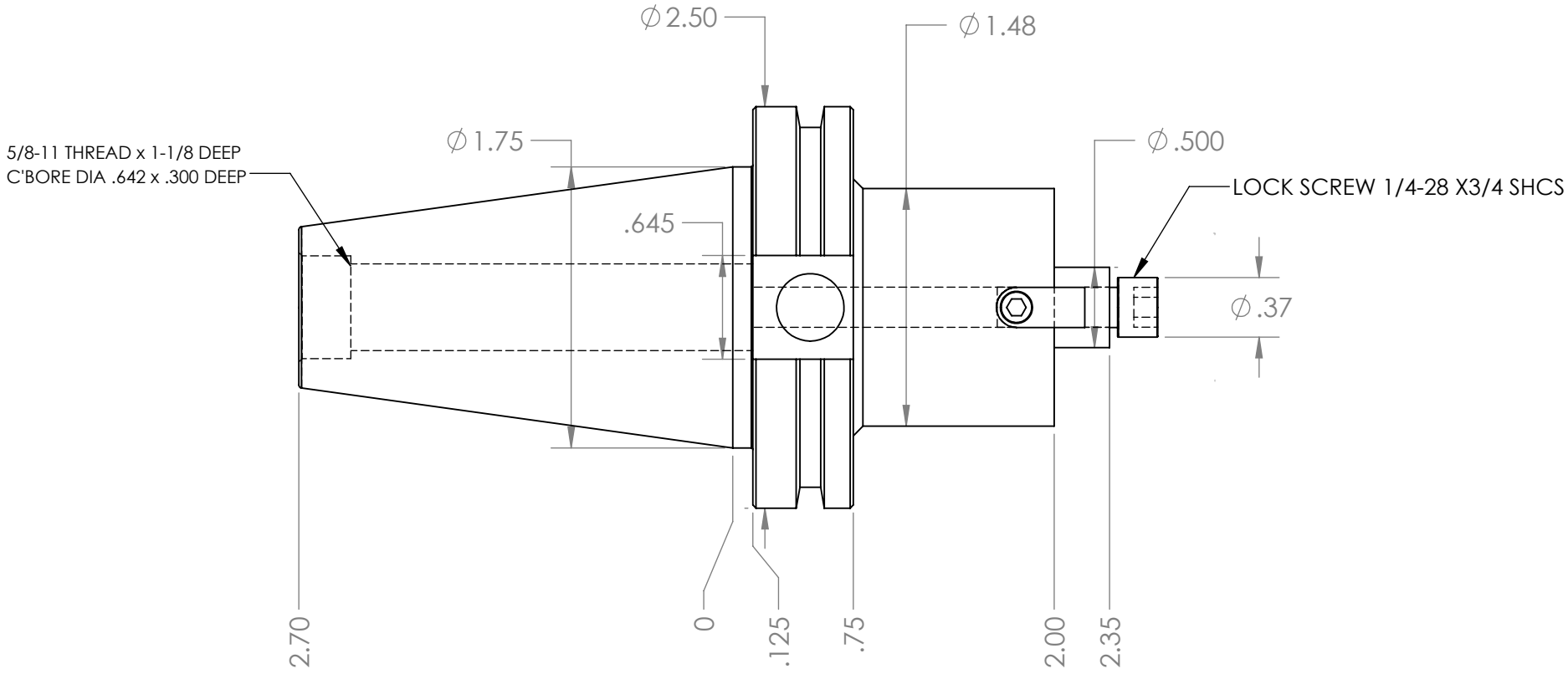

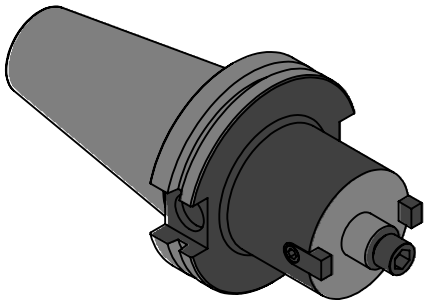

NOTES:
HOLDER USES LOCK SCREW 1/4-28 x 3/4 SHCS (INCLUDED)
FOR MORE PRODUCT DETAILS PLEASE GO TO MARITOOL.COM
AND SEARCH ITEM # LISTED ON THIS PRINT

MARITOOL

WWW.MARITOOL.COM

ITEM# **CAT40 FMA.500-2.0MM**

Made in USA