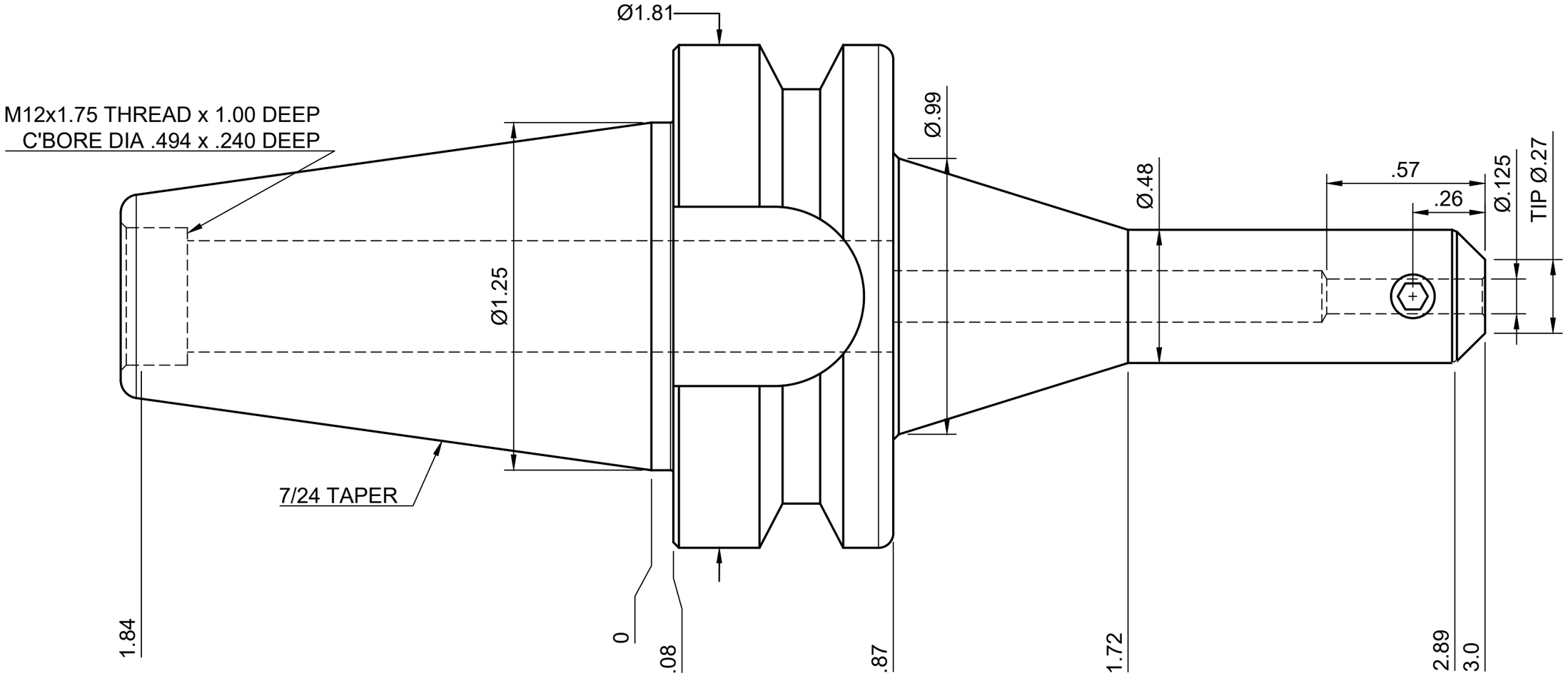

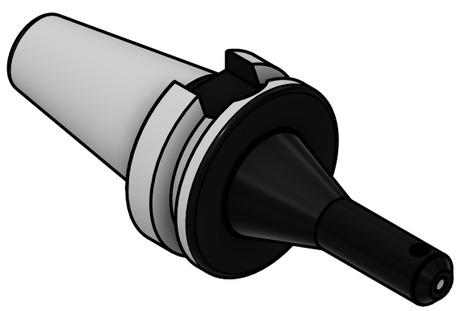

NOTES:
HOLDER USES 10 - 32 SET SCREW
SET SCREW USES A 3/32 ALLEN KEY
FOR MORE PRODUCT DETAILS PLEASE GO TO MARITOOL.COM
AND SEARCH ITEM # LISTED ON THIS PRINT

MARITOOL

www.maritool.com

ITEM# **BT30-EM.125-3.0MT**

Made In USA / Drawn By FM