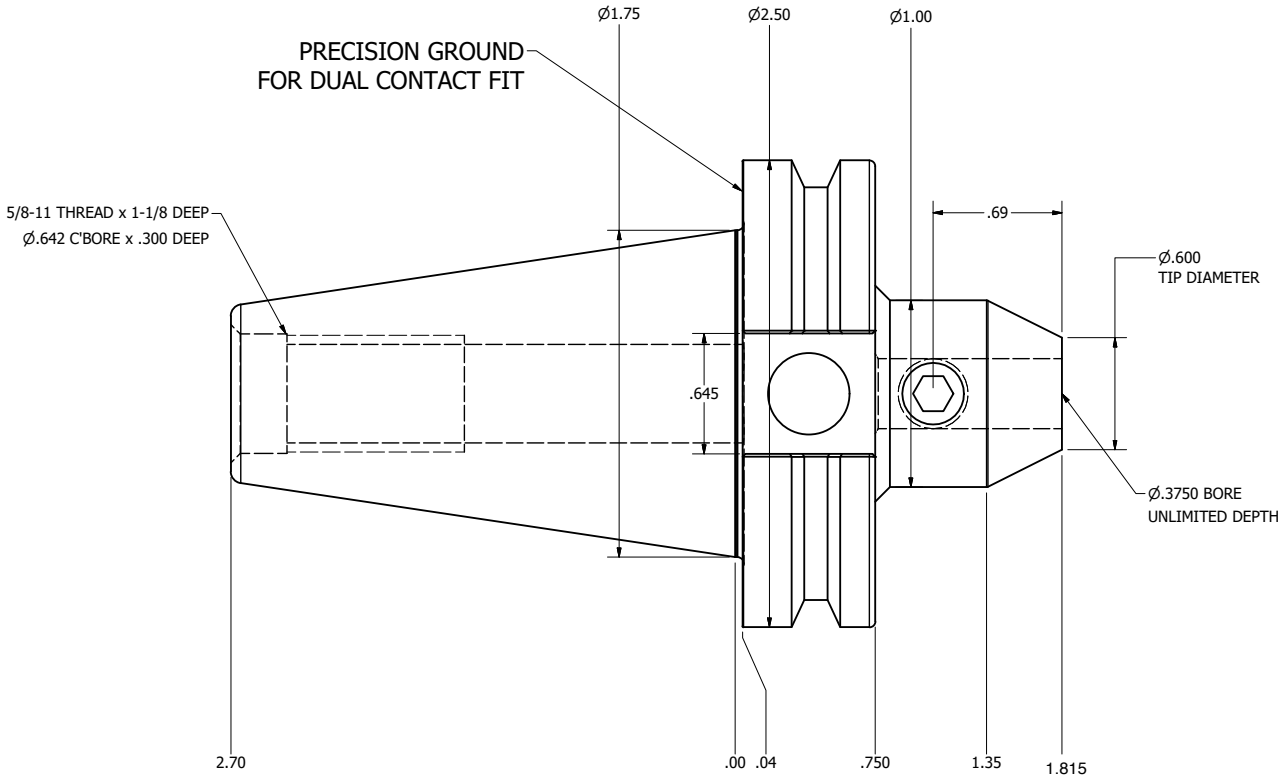

NOTES:
WORKS ON ALL CAT40 MACHINES WITCH DUAL CONTACT SPINDLES
COMPATIBLE WITH BIG-PLUS® SPINDLES
HOLDER USES 3/8-24 SET SCREW, PART #SS150
FOR MORE PRODUCT DETAILS PLEASE GO TO MARITOOL.COM
AND SEARCH ITEM # LISTED ON THIS PRINT

MARITOOL

www.maritool.com

ITEM# **CAT40-EM.375-1.75D**

Made in USA