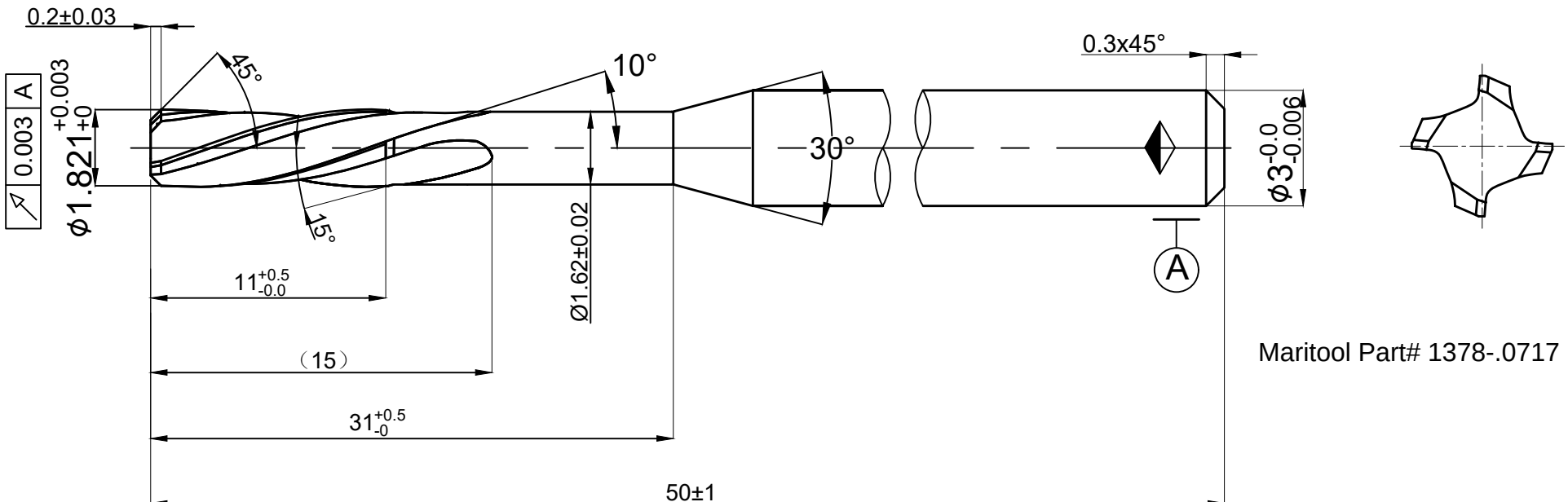


Maritool Part# 1378-.0717