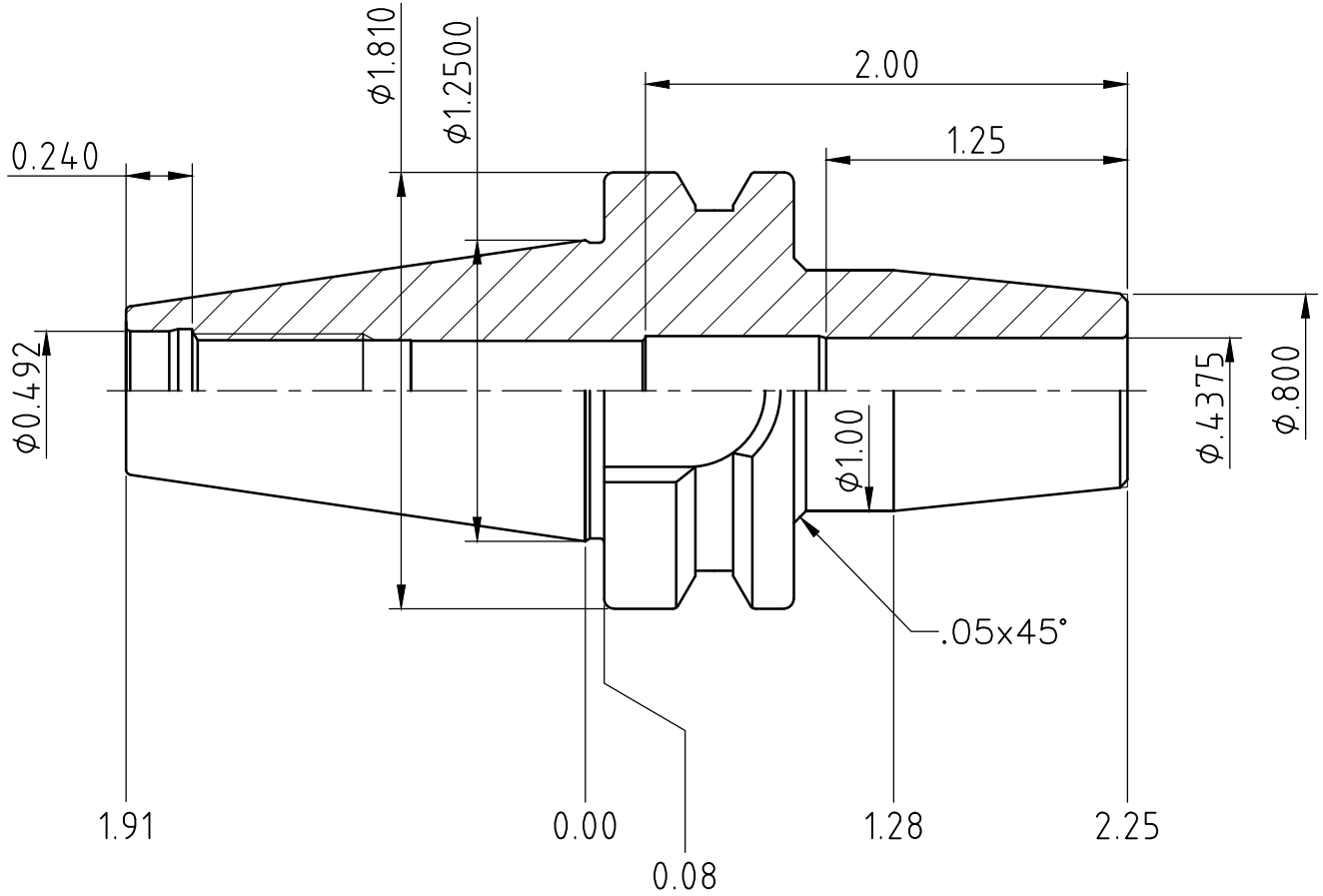

T.I.R. ACCURACY .0001"

MARITOOL

www.maritool.com

ITEM# BT30-SF.4375-2.25